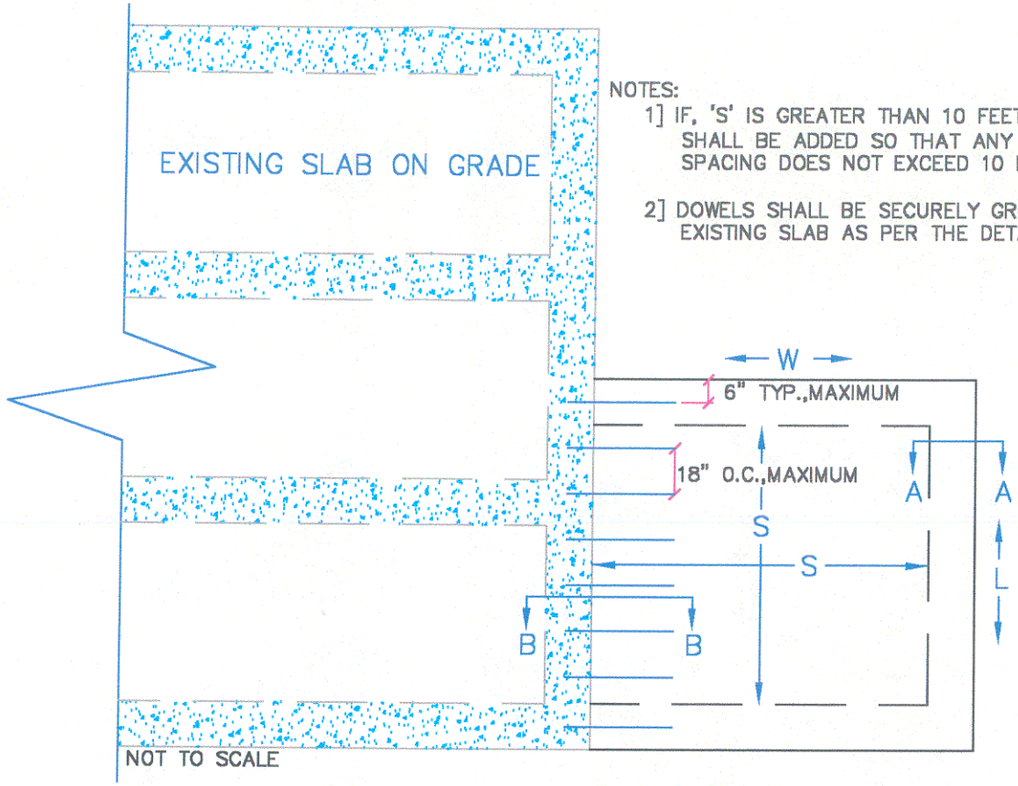

NOTES:

1] IF, 'S' IS GREATER THAN 10 FEET, AN INTERIOR BEAM SHALL BE ADDED SO THAT ANY 'FACE TO FACE' BEAM SPACING DOES NOT EXCEED 10 FEET.

2] DOWELS SHALL BE SECURELY GROUTED INTO THE EXISTING SLAB AS PER THE DETAIL.

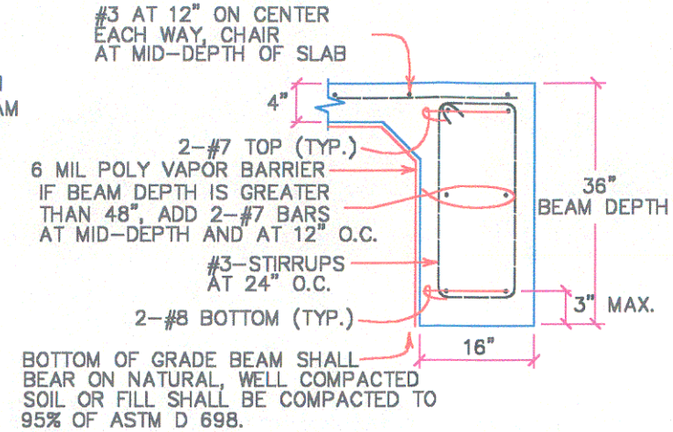

SECTION A-A
NOT TO SCALE

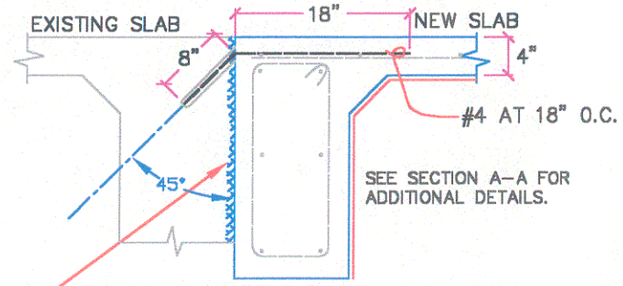

EXISTING BEAM SURFACE SHALL BE CHIPPED A MINIMUM OF 1/2" DEPTH OR REMOVE ALL PLASTER COATING WHICHEVER IS GREATER. THOROUGHLY REMOVE ALL DUST AND LOOSE PARTICLES BY WATER OR BY COMPRESSED AIR. A SUITABLE EPOXY SHALL BE APPLIED TO THE CHIPPED SURFACE IN ACCORDANCE WITH MANUFACTURES DIRECTIONS.

SECTION B-B
NOT TO SCALE

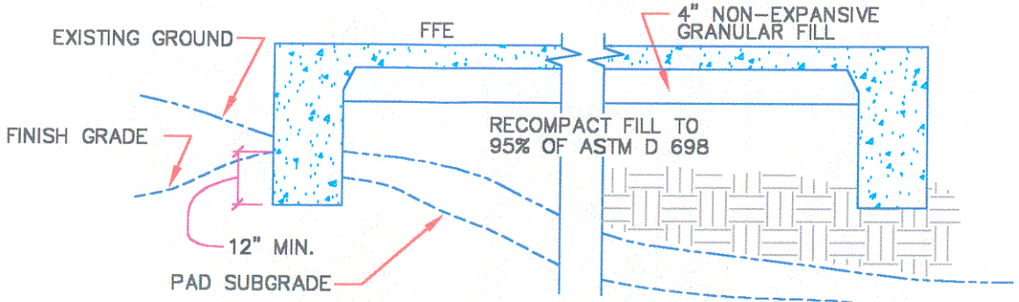

FILL MATERIAL SHALL HAVE A PLASTICITY INDEX NOT EXCEEDING EXISTING MATERIAL AND SHALL BE COMPACTED TO 95% ASTM D 698 IN 8" MAXIMUM LIFTS.

FOUNDATION PAD CONSTRUCTION
NOT TO SCALE

CONVENTIONAL REINFORCING
FOUNDATION ADDITION
SLAB ON GRADE CITY OF TAYLOR, TEXAS